DISPOSITION

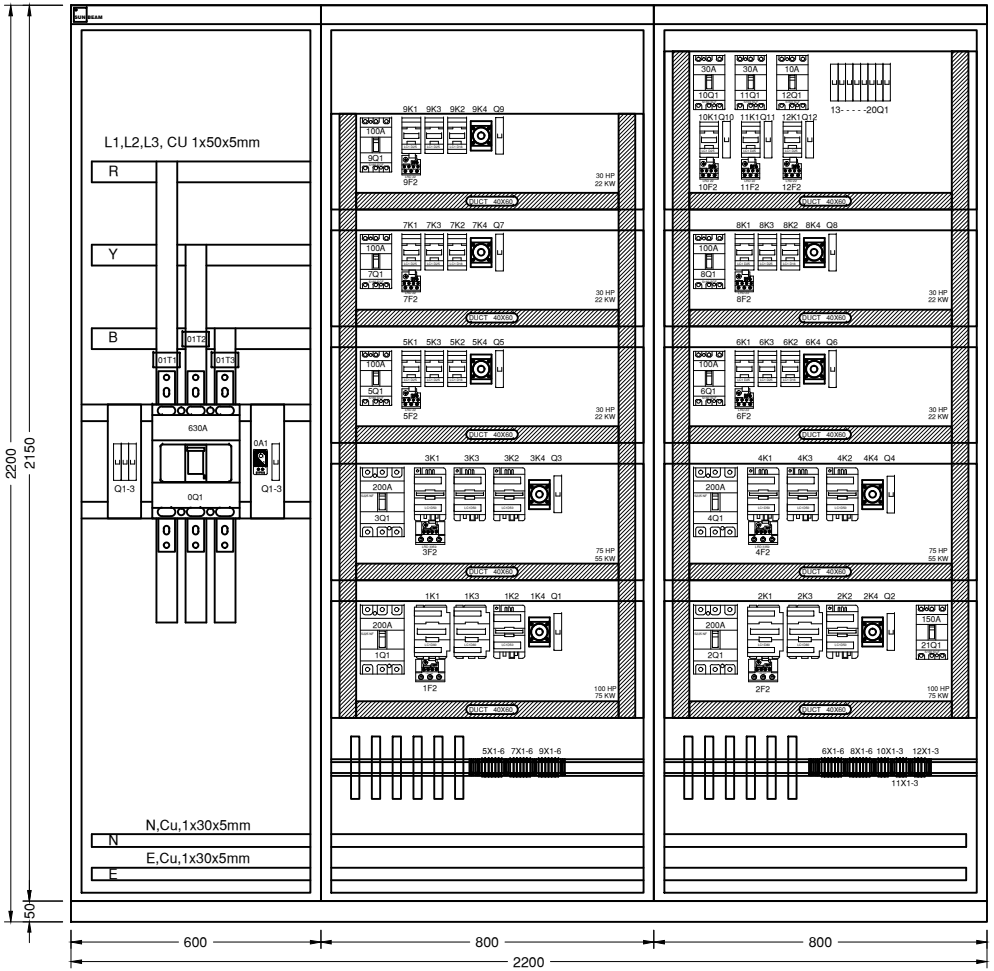

SIDE VIEW - B

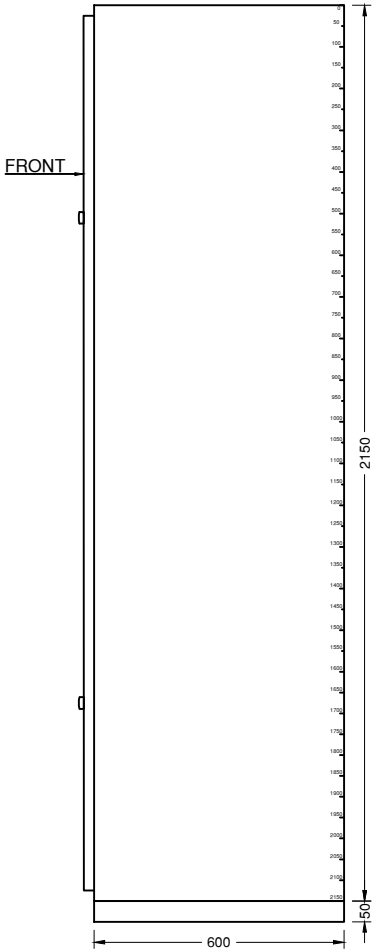

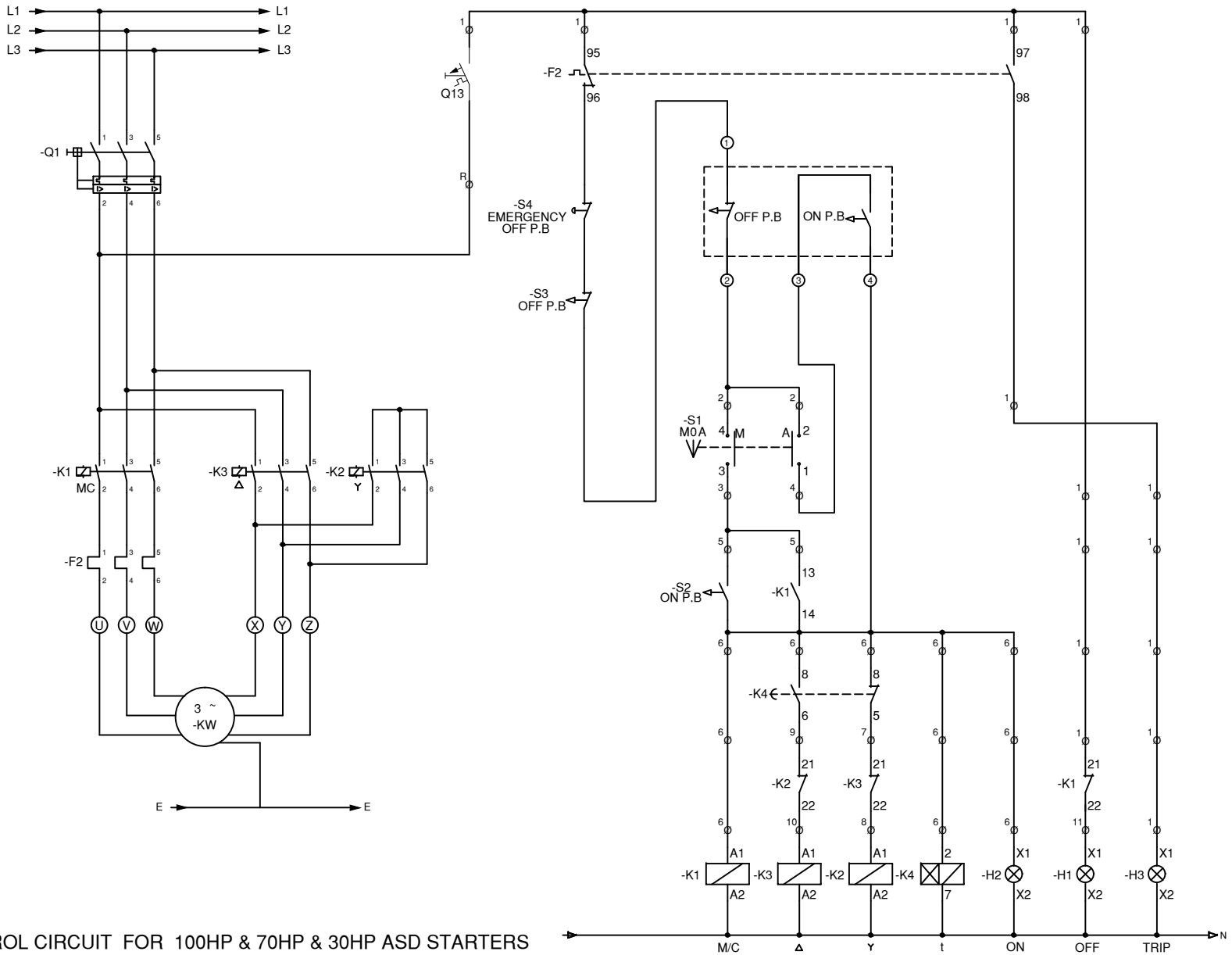

CONTROL CIRCUIT FOR 100HP & 70HP & 30HP ASD STARTERS